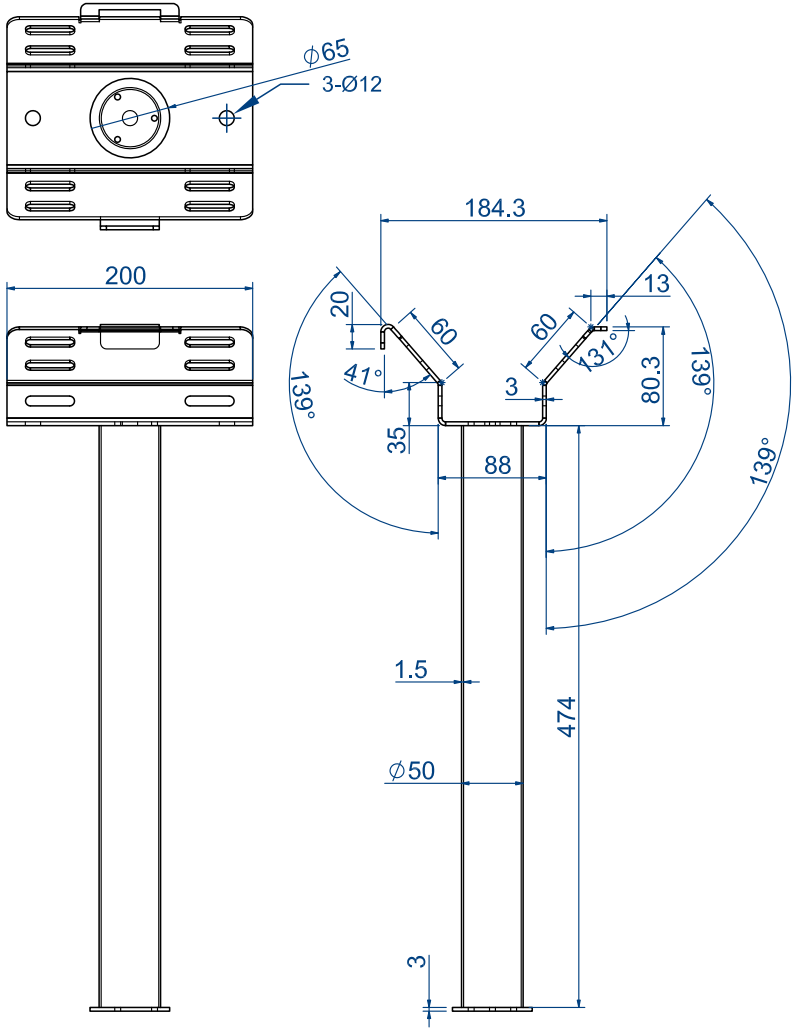

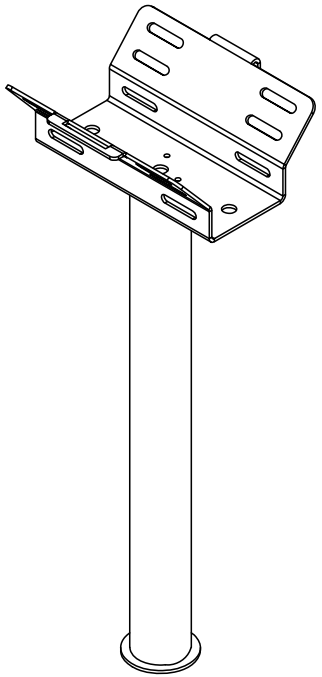

Product Details
Brand: Elumen8
Product name: Stabilize T1
Order code: BRAC040