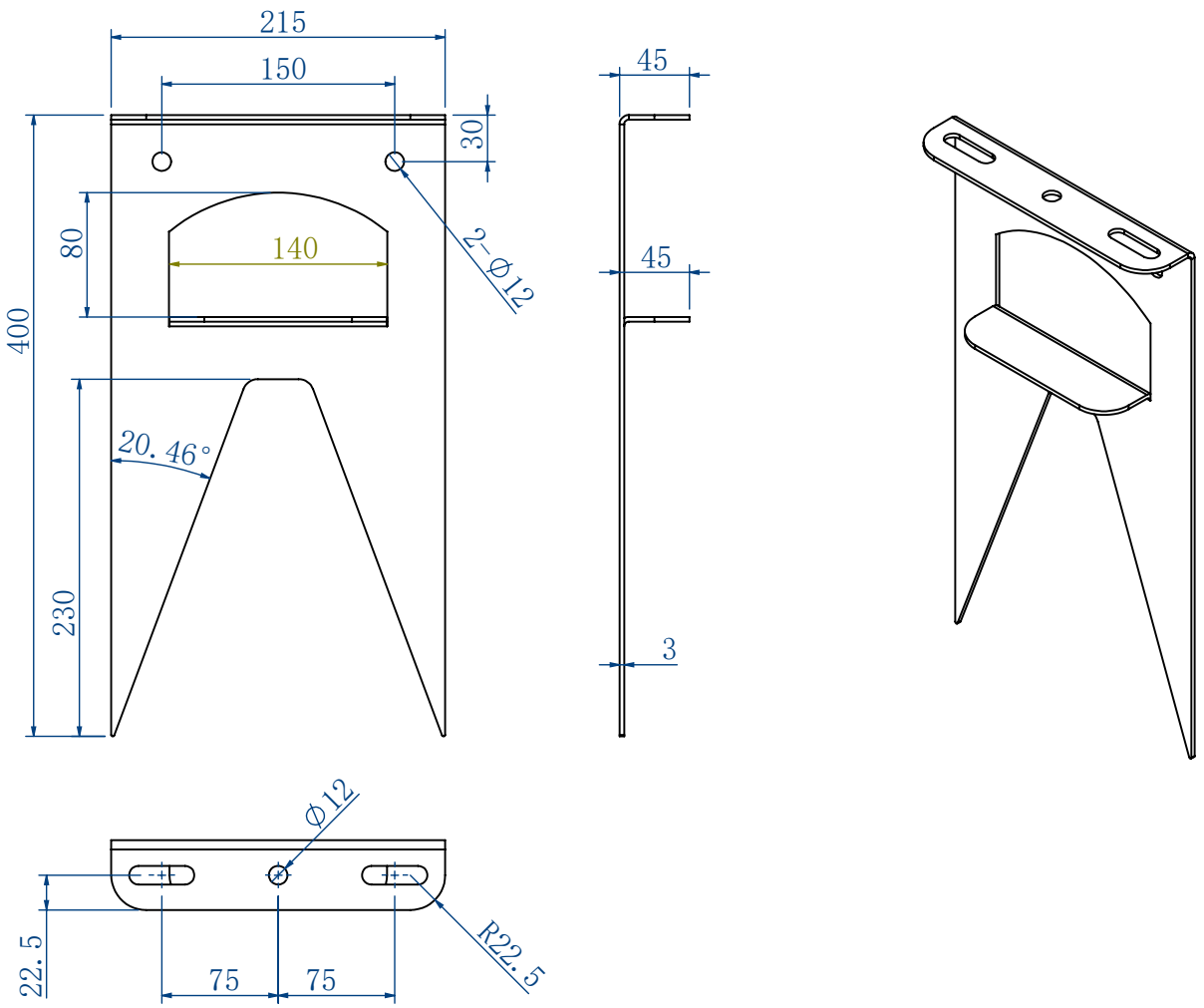

Product Details
Brand: Elumen8
Product name: Stabilize G1
Order code: BRAC042