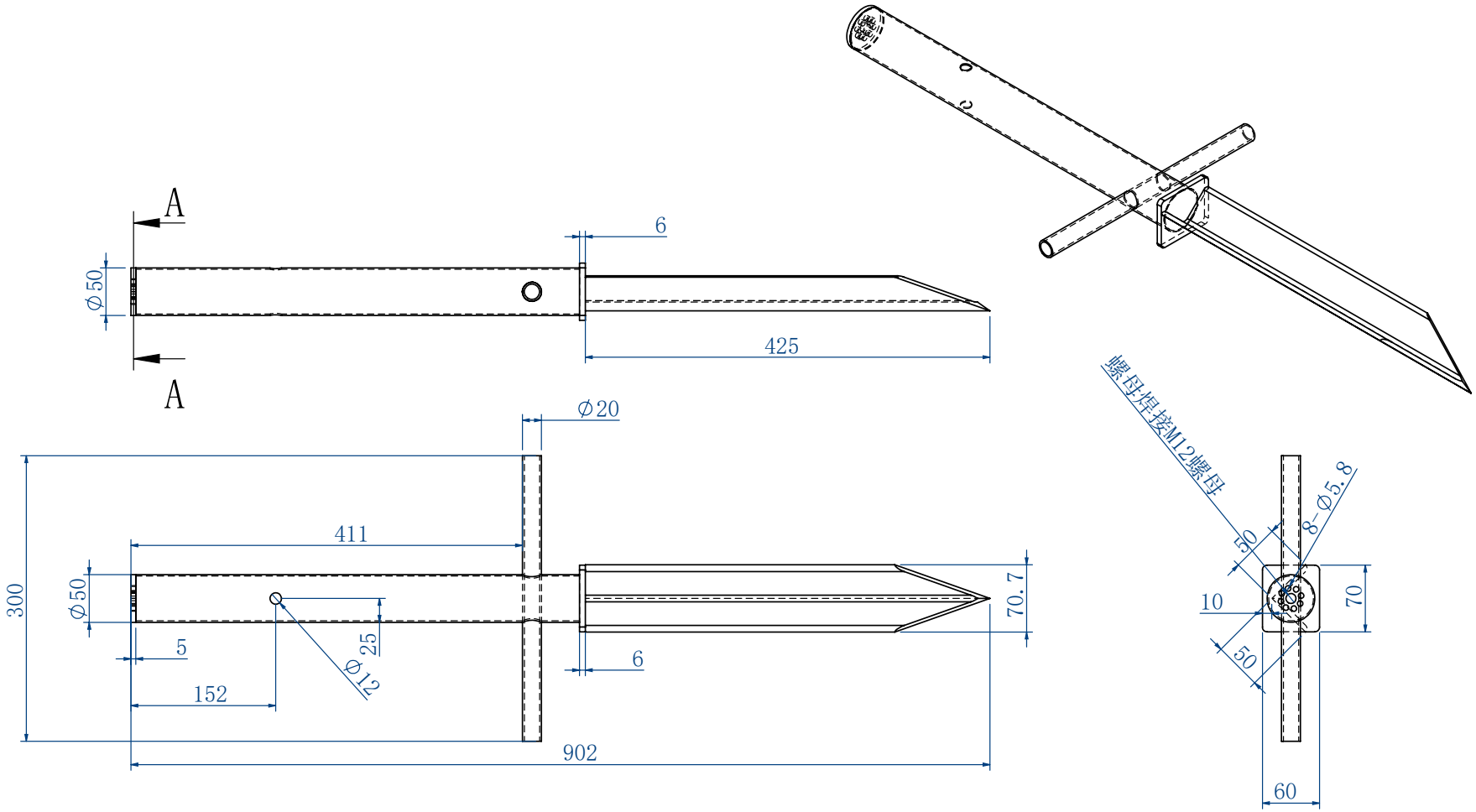


| Product Details |
| --- |
| **Brand:** Elumen8 |
| **Product name:** Stabilize G2 |
| **Order code:** BRAC043 |