TECHNICAL DRAWING

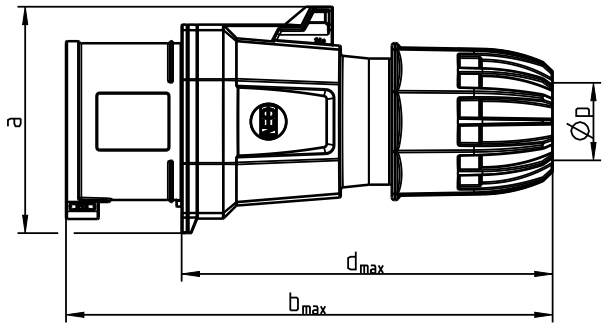

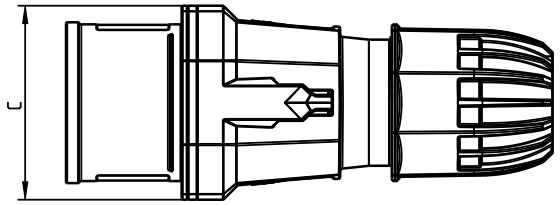

Amp.	16A			32A		
Pole	3	4	5	3	4	5
a	60	71	75	84	84	89
b	137	160	160	191	191	191
c	53	65	65	76	76	76
d	100	124	124	146	146	146
Ød	6.5-14	7.1-17	7.1-17	9.6-28.5	9.6-28.5	9.6-28.5