NEO CEE
Coupler Classic



walther-electric.de

WALTHER ELECTRIC GmbH
Ramsener Straße 6 | 67304 Eisenberg

PRODUCT DESCRIPTION

Features

- Enclosure release system "Push to Open"
- Easy connection using WAGO® CAGE CLAMP®
- Red colour ring for identification of voltage and frequency levels
- External cable gland with strain relief

Electrical properties

- IEC-current: 32 A
- Current according to UL/CSA: 30 A
- Number of poles: 5
- Clock position: 6 h
- Voltage: 400V

Enclosure characteristics

- enclosure made from PA6 material
- with high temperature resisting contact carriers made from PA66 material

CERTIFICATES

40055629

Plugs, sockets and couplers
IN ACCORDANCE WITH
IEC PUBLICATION 60309
<43EA>

E188992

TECHNICAL SPECIFICATIONS

Variant

Insert direction	straight
Cable entry	gland nut
Cable diameter	9,6-28,5 mm

Electrical properties

IEC-amperage	32 A
Amperage according to UL/CSA (for UL-version)	30 A
Number of poles	5
Clock hour position	6 h
Identification colour	red
Voltage acc. IEC 60309 (series I)	200/346-240/415V
Rated voltage	415V
Rated frequency	50-60Hz
Connection system	screw less terminal
Conductor cross-section (flexible)	2,5 - 10 mm^2
Conductor cross-section (rigid)	2,5 - 10 mm^2
Jacket stripping length	60 mm
Minimum insulation stripping length	9 mm
Maximum insulation stripping length	11 mm
Contact material	CuZn
Contact surface treatment	untreated

Enclosure properties

Material	plastic
Degree of protection (IP)	IP54
Maximum tightening torque (cable gland)	6,0 Nm
Housing flammability class	V2
Contact carrier flammability class	V0

CONFORMITIES

CE conformity	true

ORDER INFORMATION

GTIN number	4015609284917
Customs tariff number	85366990
WEEE registration number	DE 22131895
Net length	196 mm
Net width	97 mm
Net depth	76 mm

DIMENSIONAL DRAWING

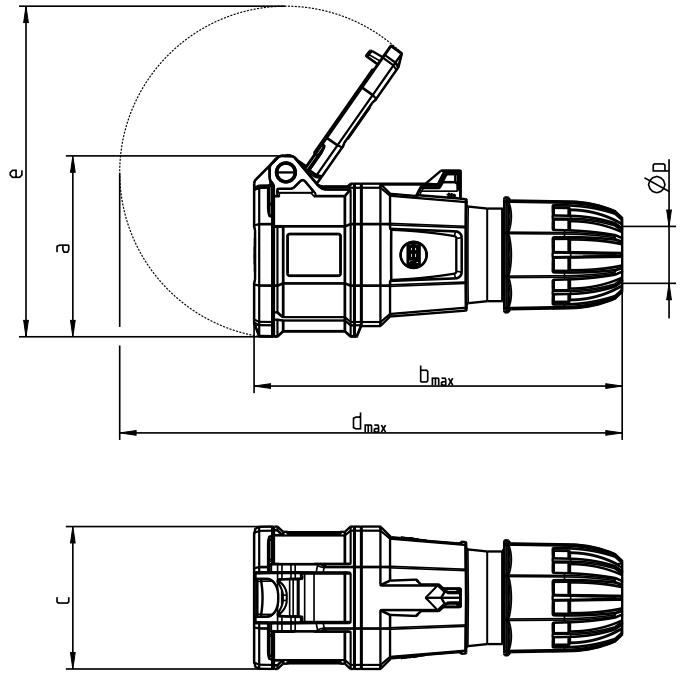

Amp.	16A			32A		
Pole	3	4	5	3	4	5
a	72	82	87	94	94	97
b	146	165	165	196	196	196
c	54	65	69	76	76	76
d	195	221	229	263	263	268
e	131	145	160	169	169	177
Øp	6.5-14	7.1-17	7.1-17	9.6-28.1	9.6-28.5	9.6-28.5

PRODUCT RECOMMENDATION



FW230506CC



FW231506SK



FW330506CC



FW431506CC

ADDITIONAL PRODUCT IMAGES



